G 1/4 - G 1 MAXFLOW LUBRICATORS

- Made as per ISO 6301-1 standard.
- Proportional oil mist type design.
- Constant steady delivery.
- Sensitive oil flow adjustment.
- Safety 'Lock Ring' to lock bowl.
- Easy bowl removal/refixing by lifting of 'Lock Ring' and with 90° turn of bowl. #

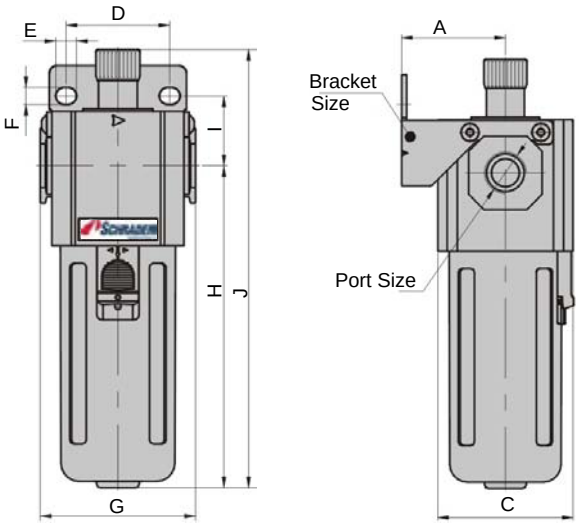

PORT SIZE	A	B	C	D	E	F	G	H	J
G 1/4	30	23	40	27	8.4	5.4	47	80	120
G 3/8	41	27	53.4	40	8	6.5	60	125	170
G 1/2	41	27	53.4	40	8	6.5	60	125	170
G 3/4	70	50	--	66	13	11	85	194.5	257.5
G 1	70	50	--	66	13	11	85	194.5	257.5

SPECIFICATIONS

Medium	Filtered Compressed Air					
Design	Proportional oil mist type Lubricator					
Mounting	Line / Wall mounting					
Connection	G 1/8	G 1/4	G 3/8	G 1/2	G 3/4	G 1
Standard nominal flow rate *	3200 l/min.		5000 l/min.	5000 l/min.	12000 l/min.	12000 l/min.
Primary pressure range	Max. 10.0 bar					
Recommended oil	ISO VG 32 (BPCL-Hydrol 32 / HPCL-Enklo 32 / IOCL-Servo Syst 32 / MOBIL-Spintech 32)					
Bowl capacity	25 cc.		75 cc.	75 cc.	380 cc.	380 cc.
Temperature range for optimal performance	5° - 60° C					
Material	Housing : Aluminium alloy Lubricater Bowl :Transparent Polyamide with outer bowl guard for G3/8 TO G1 Seals : Nitrile					
Weight	0.13 Kg.		0.36 Kg.	0.36 Kg.	1.1 Kg.	1.1 Kg.

* (at P = 10 Bar & △ P = 1 Bar)

Applicable to the Lubricators above G 1/4 only.

ORDERING INFORMATION

Description	G 1/8	G 1/4	G 3/8	G1/2	G 3/4	G 1
Lubricator	S2L18	S2L14	S3L38	S3L12	S6L34	S6L10