G 1/4 - G 1 MAXFLOW FILTER+REGULATOR+LUBRICATOR

- Made as per ISO specifications.
- Regulator fitted with 'Rolling Diaphragm' to give quick response.
- Semi- Automatic drain removal as std feature. (Automatic Drain Optional)
- Built in gauge is provided with an option of connecting it to ext gauge.
- Easy bowl removal/refixing by 90° turn of bowl.
- Lockable safety knob provided with regulator.

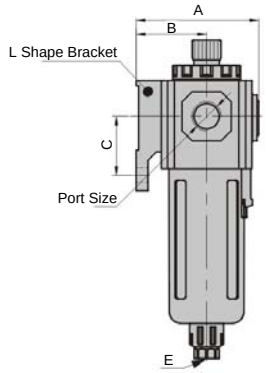

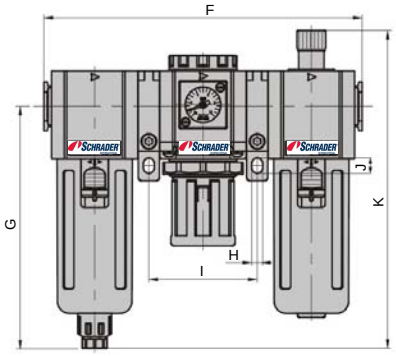

Note: Regulator is duly fixed with built in Pr. gauge. Loose blanking plate is supplied for external gauge

PORT SIZE	A	B	C	E	F	G	H	I	J	K
G 1/4	62	30	25	-	147	93	5.5	50	8.5	133
G 3/8	72	41.5	35	1/8 BSP	188	143	6.5	64	9	188
G 1/2	72	41.5	35	1/8 BSP	188	143	6.5	64	9	188
G 3/4	118	70	50	1/4 BSP	309	218	11	105	16	218
G 1	118	70	50	1/4 BSP	309	218	11	105	16	218

SPECIFICATIONS

Medium	Compressed Air				
Design	Cartridge type Filter, Regulator with rolling diaphragm & proportional oil mist type Lubricator				
Mounting	Line / Wall Mounting or Bracket mounting.				
Connection	G 1/4	G 3/8	G 1/2	G 3/4	G 1
Standard nominal flow rate *	2000 l/min.	3500 l/min.	3500 l/min.	9500 l/min.	9500 l/min.
Maximum inlet pressure	12.5 bar				
Working pressure range	Standard : 0-10 bar				
Filter element	Standard : 40 micron Optional : 5 micron				
Oil Bowl capacity	22 cc.	75 cc.	75 cc.	380 cc.	380 cc.
Filter bowl Capcity	10 cc.	40 cc.	40 cc.	230 cc.	230 cc.
Temperature range for optimal performance	5° - 60° C				
Recommended oil	ISO VG 32 (BPCL-Hydrol 32 / HPCL-Enklo 32 / IOCL-Servo Syst 32 / MOBIL-Spintech 32)				
Material	Housing : Aluminium Alloy Bowl assembly : Transparent polyamide bowl Seals : Nitrile Adjusting knob : POM				
Weight	0.6 Kg.	1.3 Kg.	1.3 Kg.	3.4 Kg.	3.4 Kg.

* (at P = 6.3 Bar & △ P = 1 Bar)

ORDERING INFORMATION

Description	Type	G 1/8	G 1/4	G 3/8	G 1/2	G 3/4	G 1
Air Filter / Regulator & Lubricator 40 micron filter cartridgeDrain	Semi automatic	-	S2FRLS14	S3FRLS38	S3FRLS12	S6FRLS34	S6FRLS10
Air Filter / Regulator & Lubricator 40 micron filter cartridgeDrain	Automatic	-	-	S3FRLA38	S3FRLA12	S6FRLA34	S6FRLA10

Note : * Replace "6 th" with "N" for 5 micron filter unit. ** Replace "A" with "B" for 5 micron filter unit.