G 1/4 - G 1 MAXFLOW REGULATOR

- Made as per ISO 6953-1 standard with aluminium diecast body.
- Fitted with 'Rolling Diaphragm' to give quick response time.
- Built in gauge is provided with an option of connecting it to ext gauge.
- Stable set pressure regardless of upstream variations.
- Lockable pressure adjusting knob.

Note: Regulator is duly fixed with built in Pr. gauge. Loose blanking plate is supplied for external gauge

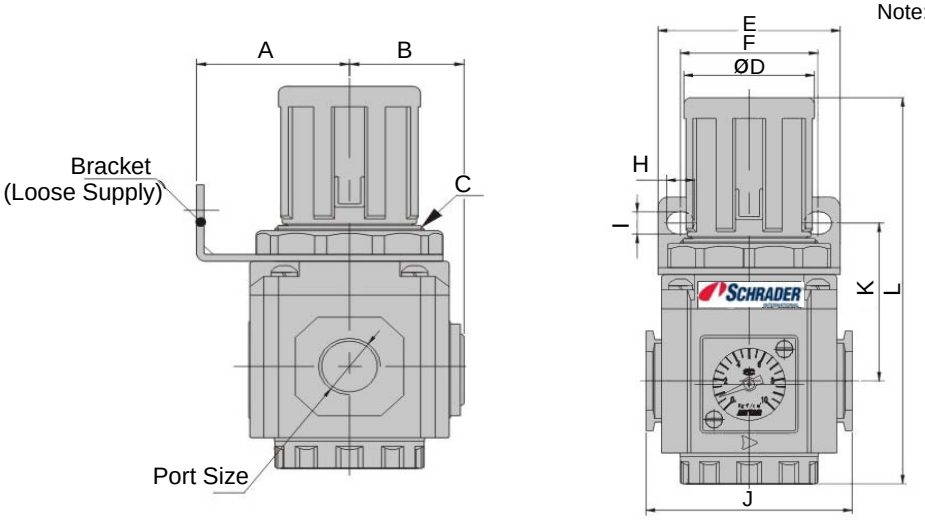

PORT SIZE	A	B	C THDS.	Ø D	E	F	H	I	J	K	L
G 1/4	30	32	M30X1.5	28	55	34	15.4	5.4	47	43	89
G 3/8	41	31	M40X1.5	38	53	40	8	6.5	60	46	113
G 1/2	41	31	M40X1.5	38	53	40	8	6.5	60	46	113
G 3/4	70	48	M68X1.5	64	90	66	13	11	99	73.5	192
G 1	70	48	M68X1.5	64	90	66	13	11	99	73.5	192

SPECIFICATIONS

Medium	Filtered Compressed Air (Lubricated or Unlubricated)					
Design	Rolling diaphragm type					
Mounting	Line / Wall Mounting or Bracket mounting / Panel mounting					
Connection	G 1/8	G 1/4	G 3/8	G 1/2	G 3/4	G 1
Standard nominal flow rate*	2500 l/min.		4000 l/min.	4000 l/min.	12000 l/min.	12000 l/min.
Maximum inlet pressure	15.0 bar					
Working pressure range	0 - 10 bar					
Temperature range for optimal performance	5° - 60° C					
MaterialHousing:	Housing : Aluminium alloy Adjusting Knob : POM Seal : Nitrile					
Weight	0.170 Kg		0.35 Kg.	0.35 Kg.	1.1 Kg.	1.1 Kg.

* (at P = 6.3 Bar & △ P = 1 Bar)

ORDERING INFORMATION

Description	G 1/8	G 1/4	G 3/8	G1/2	G 3/4	G 1
Regulator (0 - 8 Bar)	S2RG18	S2RG14	S3RG38	S3RG12	S6RG34	S6RG10

Note : Microregulator is offered in G1/8" and 1/4" series (without gauge) having part nos. S2MR18 AND S2MR14 respectively