G 1/4 - G 1 MAXFLOW FILTERS

- Made as per ISO 5782-1 standard.
- High level of condensate seperation.
- Sturdy construction in aluminium.
- Easy removal/refixing of bowl
- Bowl guard for 3/8" to 1" Size offered as a standard feature.
- Semi-automatic drain removal as std
  (Feature- Automatic drain Optional)

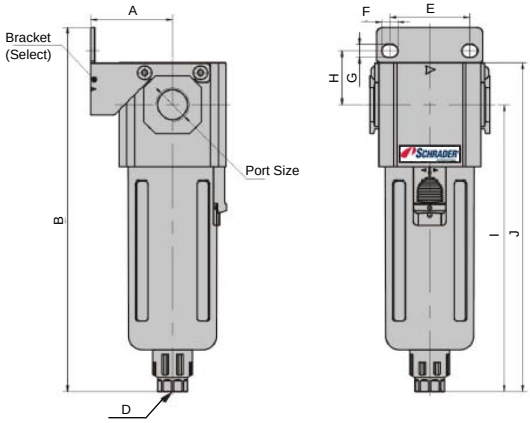

PORT SIZE	A	B	C BSP	E	F	G	H	I	J
G 1/8 G 1/4	30	123	-	27	8.4	5.4	23	-	110
G 3/8	41	182	1/8	40	8	6.5	27	143	164
G 1/2	41	182	1/8	40	8	6.5	27	143	164
G 3/4	70	280	3/4	66	13	11	50	218.7	256
G 1	70	280	3/4	66	13	11	50	218.7	256

SPECIFICATIONS

Medium	Compressed Air					
Design	Cartridge type Filter					
Mounting	Line / Wall Mounting					
Connection	G1/8	G 1/4	G 3/8	G 1/2	G 3/4	G 1
Standard nominal flow rate *	3000 l/min.		4800 l/min.	4800 l/min.	12000 l/min.	12000 l/min.
Operating pressureMax.	10.0 bar					
Filter element	Standard : 40 micron Optional: 5 micron					
Condensate capacity	10 cc.		40 cc.	40 cc.	230 cc.	230 cc.
Temperature range for optimal performance	5° - 60° C					
Material	Housing : Aluminium alloy Filter Bowl : Transparent Polyamide with outer bowl guard for G 3/8 to G1 Seals : Nitrile					
Weight	0.14 Kg.		0.36 Kg.	0.36 Kg.	1.1 Kg.	1.1 Kg.

* (at P = 6.3 Bar &△ P = 1 Bar)

ORDERING INFORMATION

Description	Type	G 1/4	G 1/4	G 3/8	G1/2	G 3/4	G 1
Air Filter with 40 micron filter cartridge *	Semi automatic Drain	S2FS18	S2FS14	S3FS38	S3FS12	S6FS34	S6FS10
Air Filter with 40 micron filter cartridge **	Automatic Drain	-	-	S3FA38	S3FA12	S6FA34	S6FA10

Note : ** Change 4 th digit to 'N' for 5 micron filter with semiautmatic drain facility.
* Change 4th digit to 'B' for 5 micron filter with automatic drain facility.